Optimal Audio

USER GUIDE

SmartAmp

Amplifiers with DSP

Amplifiers

>

SmartAmp

Amplifiers with DSP

Optimal Audio

Congratulations on your choice of Optimal Audio for your latest sound system installation.

The Optimal Audio range of compatible audio zoners, controller, amplifiers and loudspeakers are designed to work together simply and effectively. Our quick start guides will take you through connectivity and set up in a straightforward style that reflects the Optimal Audio brand.

Important Information

Prior to installation of SmartAmp, please check for latest **firmware update.**

https://optimal-audio.co.uk/support/software

© 2026. Optimal Audio Group Ltd. (v2.0)

SmartAmp firmware update v2.00
Installation of the Firmware Update Tool

Run Setup.msi and click Next through to completion.

Now the application and supporting firmware files are installed on your computer.

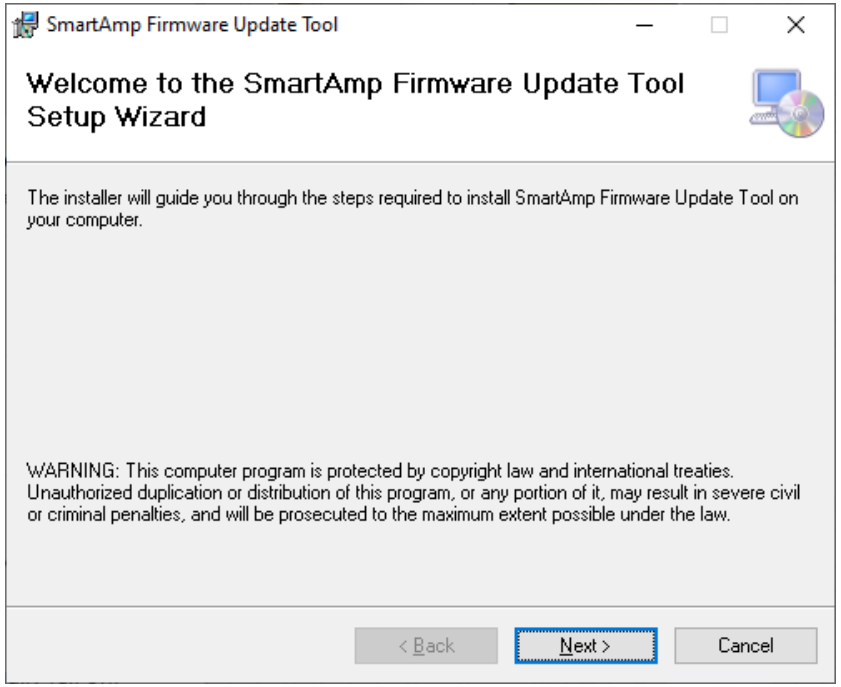

The Update Tool can be found on the start menu.

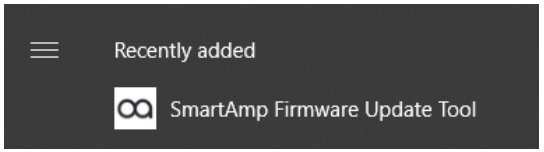

Click to run it.

The tool will launch and begin searching for the SmartAmp product – showing a red Offline message until one is found.

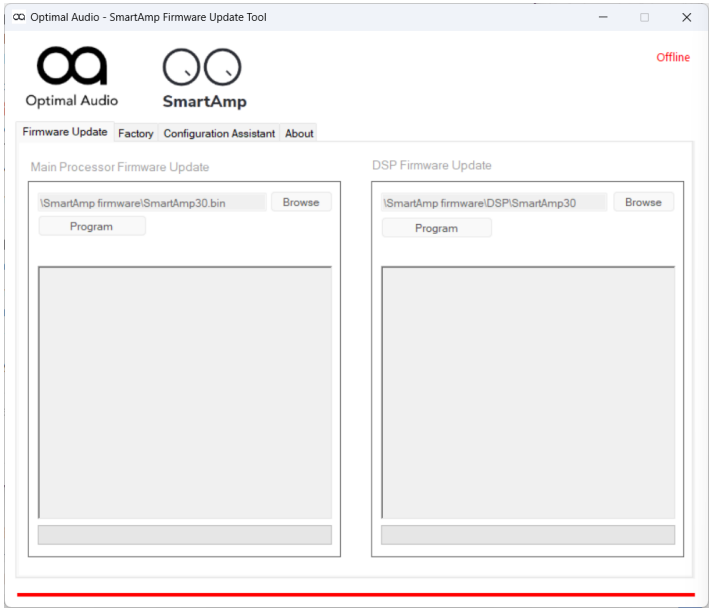

© 2026. Optimal Audio Group Ltd. (v2.0)

Attach the SmartAmp to your computer with a USB micro lead in the maintenance port on the back of the amplifier.

The update tool will automatically find the amplifier and show the connected status, changing to blue.

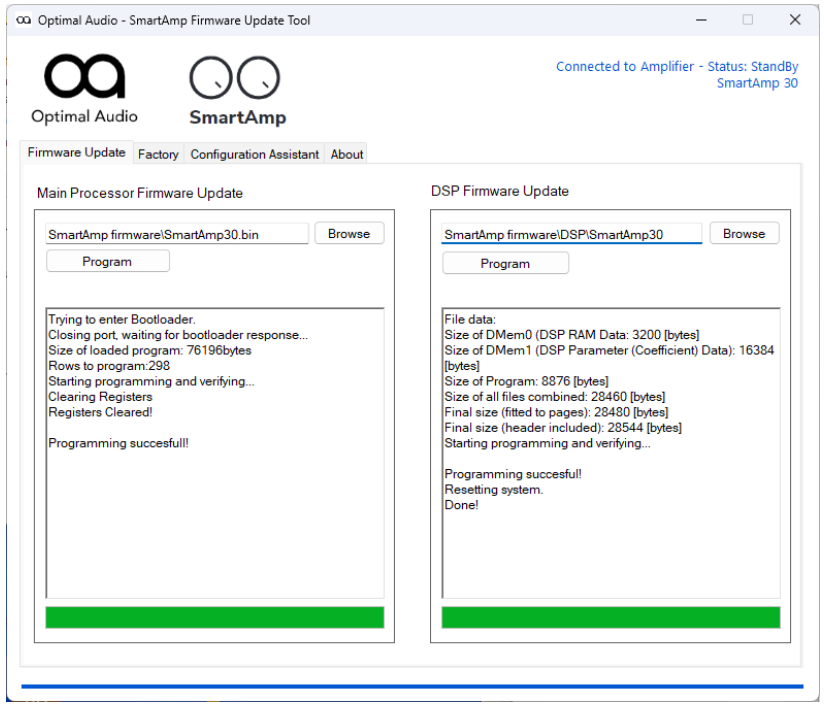

Choose the correct firmware binary (.bin) file for the SmartAmp product you are updating. Press Program to update the unit. The progress will be indicated with status messages and the progress bar.

Choose the correct DSP firmware folder for the SmartAmp product you are updating. Press Program to update the unit. The progress will be indicated with status messages and the progress bar.

The following step is to verify the unit has matching firmware and DSP firmware.

Select the factory tab.

Press the Program SmartAmp personality button. Programming progress is shown in the message window. All messages must be green to ensure firmware is loaded correctly.

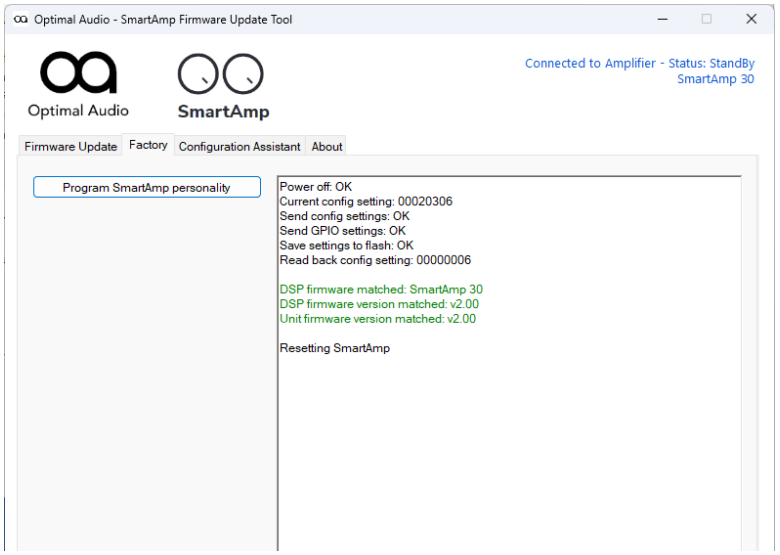

© 2026. Optimal Audio Group Ltd. (v2.0)

Configuration Assistant

This tab assists with dip switch preset settings showing how channels are routed, signal present lights, connector wiring and trim settings.

Choose the desired preset in reference to the table in the user guide.

The current dip switch settings are shown by the assistant and explained in the text below for each output.

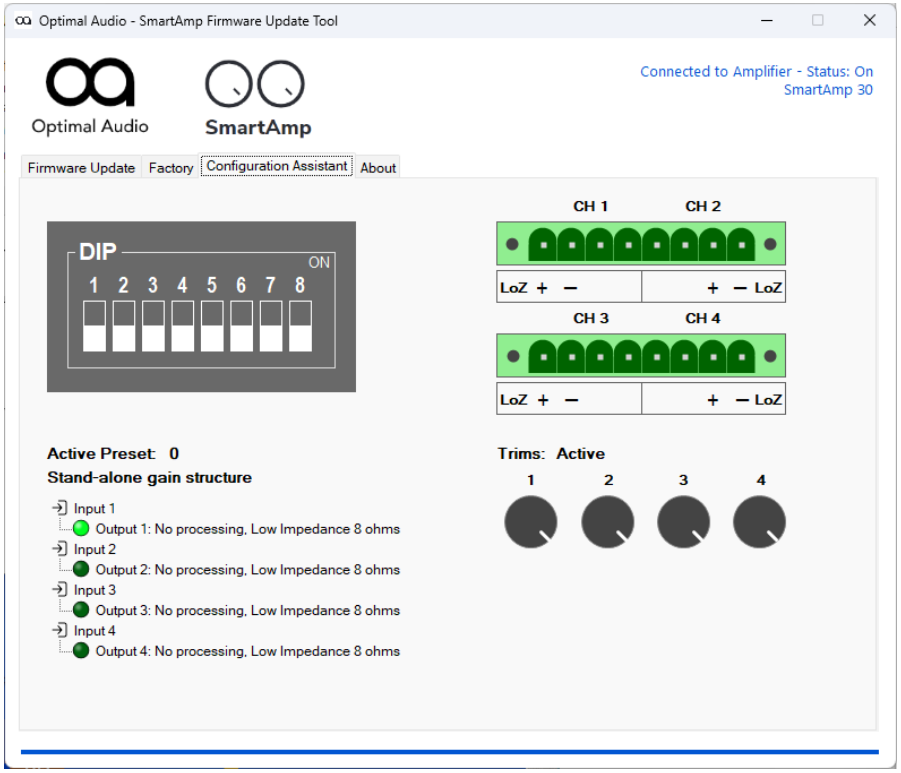

Where a preset is selected that mixes subs and full range speaker types, a crossover is activated and the inputs linked as shown. When trims are active, these are shown with their live setting.

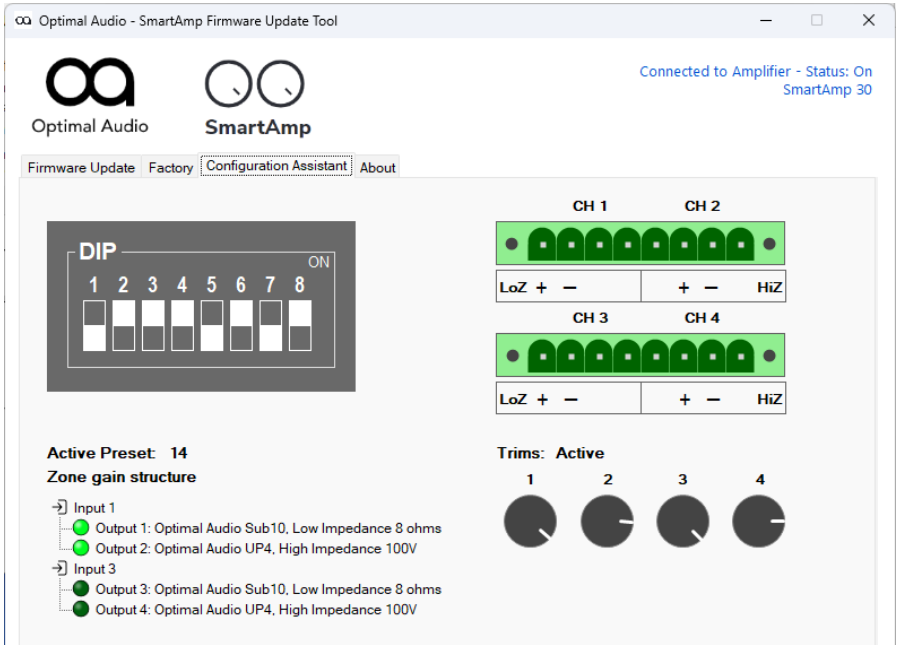

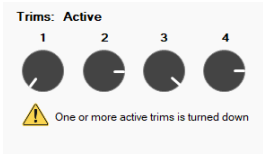

Where a preset relies on trims being set and one or more are turned down resulting in no audio output on that channel, a warning is issued.

The rear panel speaker wiring is shown, indicating low impedance and high impedance connections where appropriate for the selected preset.

© 2026. Optimal Audio Group Ltd. (v2.0)

SmartAmp

Amplifiers with DSP

There are three amplifiers in the SmartAmp range:

SmartAmp 10

Two channels of Class D amplification, 125W each with power sharing, low impedance or 70 – 100V output, integrated DSP

SmartAmp 20

Four channels of Class D amplification, 125W each with power sharing between pairs of channels, low impedance or 70 – 100V output, integrated DSP

SmartAmp 30

Four channels of Class D amplification, 250W each, low impedance or 70 – 100V output, integrated DSP

© 2026. Optimal Audio Group Ltd. (v2.0)

Start using your SmartAmp

All SmartAmps come loaded with DSP presets for Optimal Audio Up series ceiling speakers and the smaller models in the Cuboid range. Presets are easily selected via the dip switches on the rear panel. Presets can be found later in this guide.

SmartAmp 10 and 20 offer increased flexibility through power sharing between pairs of channels. This means that if the power requirement on one channel of an adjacent pair is required to deliver more that its rated 125W, it can draw unused power from its partner channel, assuming it has the power available.

This does not apply for SmartAmp 30, which offers 4 channels of 250 W.

All SmartAmp models use identical connectors, which are supplied with the units. Inputs are 3.5mm pitch green Euro Block connectors. Amplifier outputs are 5mm pitch green Euro Block connectors. Refer to the diagrams on the rear panel of SmartAmp for the correct wiring, and the Optimal Audio Connectors and Cables, Lights and Labels Quick Start Guide, which will help you get the wiring right.

- Connect the output of your Optimal Audio Zone 4 or 8 that relates to the loudspeakers in the area you want your SmartAmp to power
- Once you have connected everything up, plug your SmartAmp into the mains power and turn it on
- Turn the relevant amplifier channel volume knob all the way up
- Apply signal and the amplifier will automatically wake up, the front panel LED turning from red (standby) to green (operational)
- Green LED’s will illuminate on the channels to which signal is applied.

© 2026. Optimal Audio Group Ltd. (v2.0)

Powering Up

240V AC, 50/60Hz. Use the mains cable appropriate to your region as supplied with the amplifier and connect it to a switched mains supply.

SmartAmp amplifiers have no mains power switch and are operational as soon as mains power is connected. Ensure that all signal, GPIO and output connections are made and that all DIP switch options are selected appropriately before connecting the amplifier to mains power.

NOTE
SmartAmps are Energy Star compliant and will sleep when not in use to minimize energy consumption. The amplifier will wake up from standby when an input signal of -57dBu or above is present.

If using in conjunction with a paging system, we would recommend playing background music through the system to ensure the amplifier remains active. After 25 minutes without a signal the amplifier will return to standby mode.

© 2026. Optimal Audio Group Ltd. (v2.0)

Rear Panel Connections & Controls

SmartAmp 10

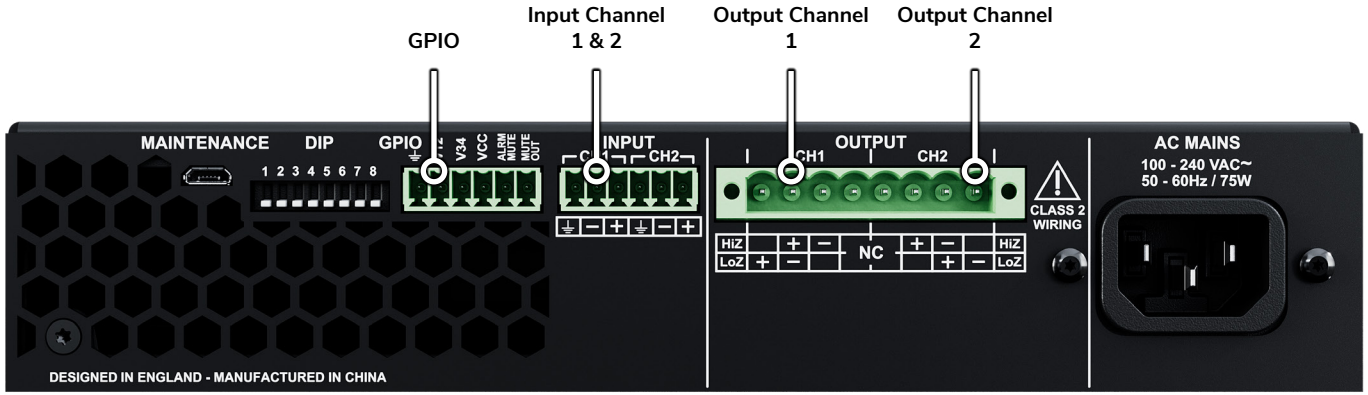

SmartAmp 20 & SmartAmp 30

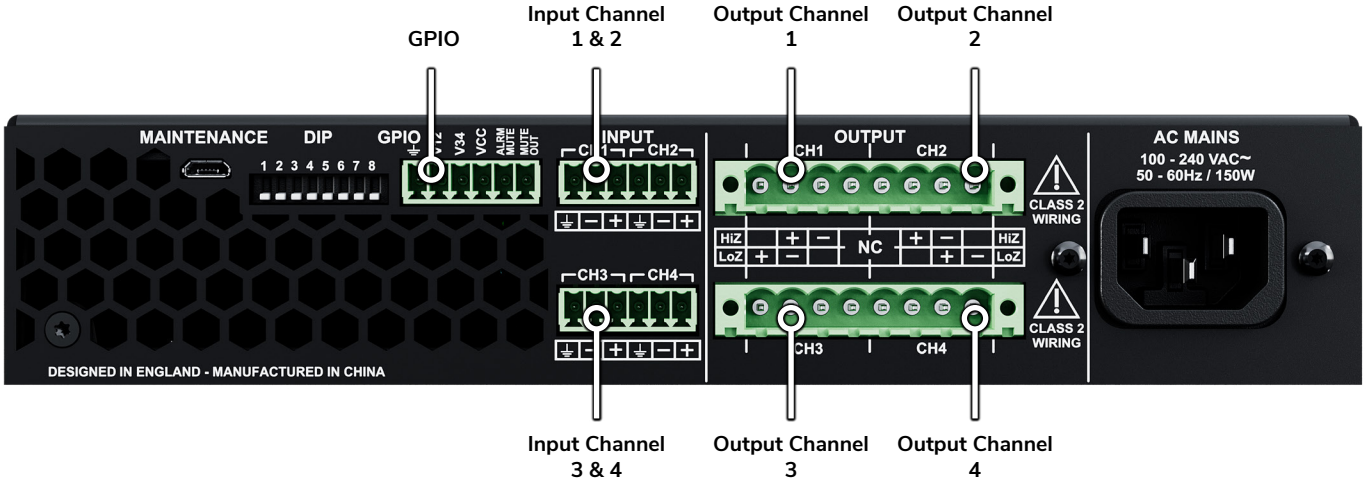

© 2026. Optimal Audio Group Ltd. (v2.0)

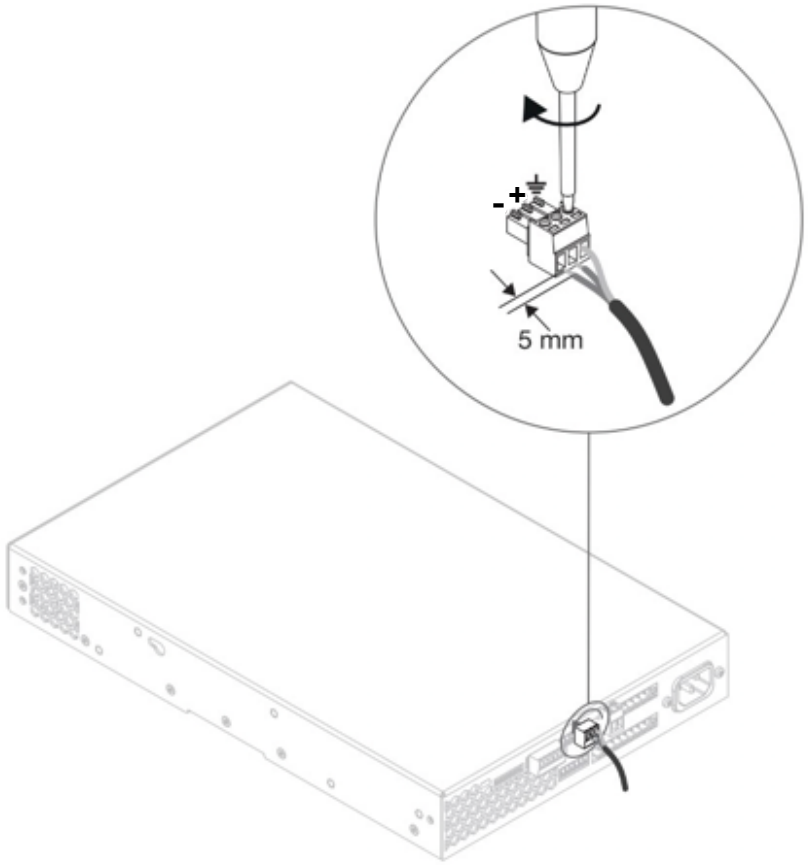

Input Connections

SmartAmp inputs are of balanced, line level format and require the use of suitable two-core, screened signal cable.

Input connections to SmartAmp are achieved via male ‘Euro Block’ connectors. Connecting cables to the supplied female input connectors is illustrated below

© 2026. Optimal Audio Group Ltd. (v2.0)

Loudspeaker Outputs

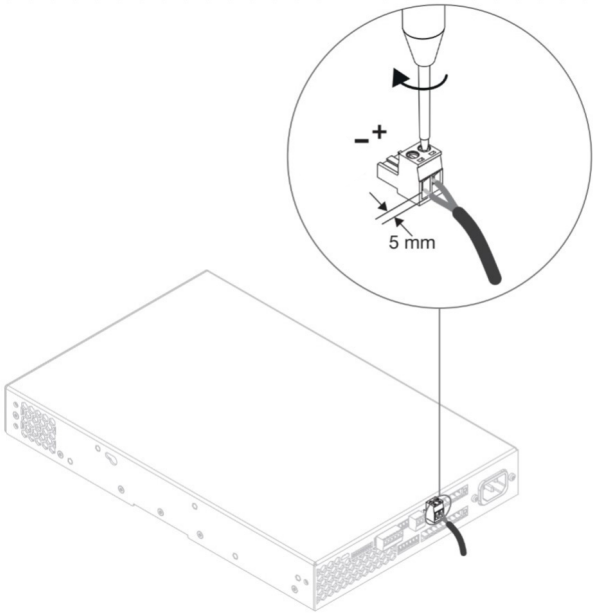

All channels are capable of both Low-Z and Hi-Z (70V or 100V) outputs.

Output impedance is selected by a combination of the impedance switches and the active preset. Where presets include subs, these channels are fixed at low impedance.

It is critical that the correct connections are made using the appropriate 'Euro Block' connectors, supplied with the unit. Again, ensure the amplifier is off when connecting loudspeakers and check that you have used the correct combination of pins for your application.

Be aware that the Hi-Z output pins can deliver voltages up to 100 volts!

Output connections from SmartAmp are achieved via male 'Euro Block' connectors. Ensure that speaker connection polarity is correct throughout the installation: positive (+) amplifier terminals should always be connected to positive speaker terminals and negative (–) amplifier terminals always connected to negative speaker terminals.

Together with DIP switch configuration, the output connector blocks provide connection options that enable channel independent selection of Hi-Z or Low-Z mode. Connecting cables to the supplied female output connector, and the selection of Hi-Z or Low-Z connection options as shown in the diagram.

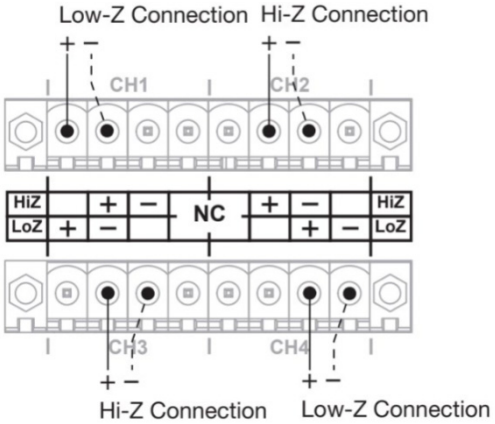

Ch1: Low-Z connection
Ch2: Hi-Z connection
Ch3: Hi-Z connection
Ch4: Low-Z connection

The caution symbol printed next to the OUTPUT terminals of the SmartAmp amplifier is in addition to the "CLASS 2 WIRING" text intended to alert the user to the risk of hazardous energy. Output connectors that could pose a risk are marked with caution symbol. Do not touch the output terminals while the amplifier power is on. Make all connections with the amplifier turned off.

© 2026. Optimal Audio Group Ltd. (v2.0)

The next two pages tell you how to set the dip switches on the rear of your SmartAmp to suit your installation.

Dip Switches

Firstly, set dip switches one to five on the rear panel according to these charts, depending on which loudspeakers you are using.

Switch view is looking at the back of the amplifier, so switch one is on the far left, switch eight on the far right of the switch bank. The white square on the chart denotes switch position.

If you are not using Optimal Audio loudspeakers, or are applying the loudspeaker presets in an Optimal Audio Zone, use preset zero.

In SmartAmps 20 and 30, preset 23 is specifically designed for situations where you are using a low impedance subwoofer (for example, 8Ω) with high impedance (70 or 100V line) satellite speakers.

The next page explains further settings for this preset.

Any preset with a * means crossover mode is enabled. Output channel pairs are routed from the odd inputs:

Input 1 -> Output 1
Input 1 -> Output 2
Input 3 -> Output 3
Input 3 -> Output 4

Front panel level controls are now enabled.

Preset No.	SmartAmp 10 Speaker Configuration		SmartAmp 20, 30 Speaker Configuration				DIP SWITCH POSITION (WHITE)				
	CH1	CH2	CH1	CH2	CH3	CH4	1	2	3	4	5
0	None	None	None	None	None	None					
1	Up 3	Up 3	Up 3	Up 3	Up 3	Up 3					
2	Up 4	Up 4	Up 4	Up 4	Up 4	Up 4					
3	Up 4O	Up 4O	Up 4O	Up 4O	Up 4O	Up 4O					
4	Up 4S	Up 4S	Up 4S	Up 4S	Up 4S	Up 4S					
5	Up 6	Up 6	Up 6	Up 6	Up 6	Up 6					
6	Up 6O	Up 6O	Up 6O	Up 6O	Up 6O	Up 6O					
7	Cuboid 6	Cuboid 6	Cuboid 6	Cuboid 6	Cuboid 6	Cuboid 6					
8	Cuboid 3	Cuboid 3	Cuboid 3	Cuboid 3	Cuboid 3	Cuboid 3					
9	Cuboid 5	Cuboid 5	Cuboid 5	Cuboid 5	Cuboid 5	Cuboid 5					
10	CDD5	CDD5	Cuboid 8	Cuboid 8	Cuboid 8	Cuboid 8					
11	None	None	Cuboid 10	Cuboid 10	Cuboid 10	Cuboid 10					
12	Sub 6	Sub 6	Sub 10	Sub 10	Sub 10	Sub 10					
13	Sub 10	Sub 10	Sub 6	Up 3	Sub 6	Up 3					
14	Sub 10	Up 3	Sub 10	Up 4	Sub 10	Up 4					
15	Sub 10	Up 4	Sub 10	Up 4O	Sub 10	Up 4O					
16	Sub 10	Up 4O	Sub 10	Up 4S	Sub 10	Up 4S					
17	Sub 10	Up 4S	Sub 10	Up 6	Sub 10	Up 6					
18	Sub 10	Up 6	Sub 10	Up 6O	Sub 10	Up 6O					
19	Sub 10	Up 6O	Sub 10	Cuboid 3	Sub 10	Cuboid 3					
20	Sub 10	Cuboid 3	Sub 10	Cuboid 5	Sub 10	Cuboid 5					
21	Sub 10	Cuboid 5	Sub 10	Cuboid 8	Sub 10	Cuboid 8					
22	Sub 10	Cuboid 6	Sub 10	Cuboid 10	Sub 10	Cuboid 10					
23	Sub 6	Up 3	Low Z Only	HiZ Only	Low Z Only	HiZ Only					
24	Sub 6	Up 4	Sub 6	Up 4	Sub 6	Up 4					
25	Sub 6	Up 4O	Sub 6	Up 4O	Sub 6	Up 4O					
26	Sub 6	Up 4S	Sub 6	Up 4S	Sub 6	Up 4S					
27	Sub 6	Up 6	Sub 6	Up 6	Sub 6	Up 6					
28	Sub 6	Up 6O	Sub 6	Up 6O	Sub 6	Up 6O					
29	Sub 6	Cuboid 3	Sub 6	Cuboid 3	Sub 6	Cuboid 3					
30	Sub 6	Cuboid 5	Sub 6	Cuboid 5	Sub 6	Cuboid 5					
31	Sub 6	Cuboid 6	Sub 10	Cuboid 6	Sub 10	Cuboid 6					

© 2026. Optimal Audio Group Ltd. (v2.0)

Dip Switches six and seven

To set the amplifier up for low impedance or high impedance (70 or 100V line) use dip switches six and seven, as per the below. Use the 4Ω setting for loads below 8Ω, and use the 8Ω setting for 8Ω to 16Ω. Note that in high impedance mode, a 70Hz high pass filter becomes active.

When using any pre-set from the table **EXCEPT** number 23, dip switches six and seven are set as per this chart, and apply to all channels in the amplifier.

DIPS	6	7	
0	■	■	Low-Z 8 ohms
1	□	■	High-Z 100V
2	■	□	Low-Z 4 ohms
3	□	□	High-Z 70V

When using preset 23 on a SmartAmp 20 or 30, dip switches six and seven behave differently, to set the channels up for different load types. These are shown in this chart.

DIP SWITCH 6&7 COMBINATIONS FOR **PRESET 23 ONLY**

DIPS	6	7	CH1	CH2	CH3	CH4
0	■	■	8 ohms	70V	8 ohms	70V
1	□	■	8 ohms	100V	8 ohms	100V
2	■	□	4 ohms	100V	4 ohms	100V
3	□	□	4 ohms	70V	4 ohms	70V

Dip Switch eight

This sets the input sensitivity of the amplifier to be used with either an Optimal Audio Zone, or a third party system.

When it is off, (lower position) an input level of +4dBu will give full amplifier output, suitable for integration with most other manufacturers' equipment. Front panel gain controls are active.

DIPS	8
0	■
	□

When used with an Optimal Audio Zone, turn this switch on (upper position). This sets the amplifier up to give full power for +20dBu input level, as required for a Zone. Front panel gain controls are inactive, and all adjustments are made in Zone, **EXCEPT** when a crossover preset is used – then the gain controls are active so level adjustment between subs and satellites can be made.

DIPS	8
1	□
	■

© 2026. Optimal Audio Group Ltd. (v2.0)

GPIO (General Purpose In/Out) Connections

The GPIO connectors enable remote control of key parameters of SmartAmp:

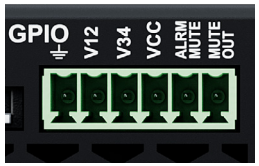

	Function	Notes
GPIO GND (1)	Ground reference for all GPIO pins	
GPIO v12 (2) *	Channel 1 & 2 auxiliary gain control	Connect to a potentiometer (>10kΩ) wiper between the VCC and GND pins. The maximum level available when using GPIO control is defined by the front panel gain control setting.
GPIO V34 (3) *	Channel 3 & 4 auxiliary gain control (four channel amplifiers only)	Connect to a potentiometer (>10kΩ) wiper between the VCC and GND pins. The maximum level available when using GPIO control is defined by the front panel gain control setting.
GPIO VCC (4)	Control voltage output	Provides a 3.3V DC control output (100Ω output impedance) for up to two volume control potentiometers (>10kΩ)
GPIO STB (5)	Alarm Mute	Connect to GND pin to mute the unit and place it in standby mode
GPIO GPO (6)	Mute Out	+3.3V DC indicates normal status, 0V DC indicates one or more channels in protection mode

*In order to conform to EMC specifications, shielded cable must be employed when connecting external volume control potentiometers to the GPIO connectors. This is to prevent the cable acting as an antenna for any radiated emissions from within the amplifier.

Be sure to use the appropriate Euro Block connector for the GPIO inputs

© 2026. Optimal Audio Group Ltd. (v2.0)

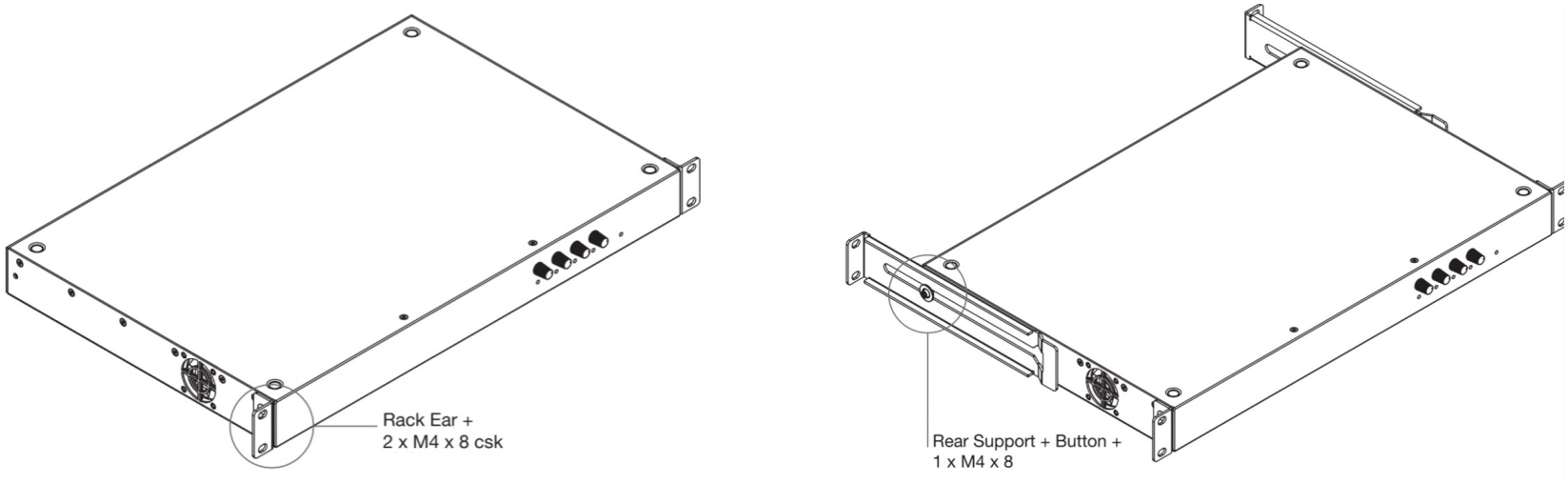

SmartAmp 30 showing rack ears and with the rear support attached

Installation & Rack Mounting

Optimal Audio provide a set of hardware options for rack mounting SmartAmp in several ways.

Rack Kit A (see Appendix A) is suitable for rack mounting both full and half-rack-sized units and enables coupling of half-rack-sized units to fit two SmartAmp 10 or 20 into a single rack space.

Rack Kit B (see Appendix B) is for providing rear support to units when mounted in mobile racks and other more demanding situations

SmartAmp Wall Mount (See Appendix C) is used for mounting any of the SmartAmp range against flat surfaces

SmartAmp 30 is shipped with rack mount 'ears' attached as illustrated above and is primarily intended to be installed in an equipment rack. The installation and equipment rack should be configured to provide appropriate ventilation airflow space around the sides and rear of the amplifier. Ventilation airflow space of at least 25 mm (1 in) should be maintained along at least one side of the amplifier at all times. Ventilation apertures are also located on the rear panel of the amplifier and must not be obstructed. It is important to retain at least 80 mm (3.1 in) free space for airflow behind the amplifier rear panel.

© 2026. Optimal Audio Group Ltd. (v2.0)

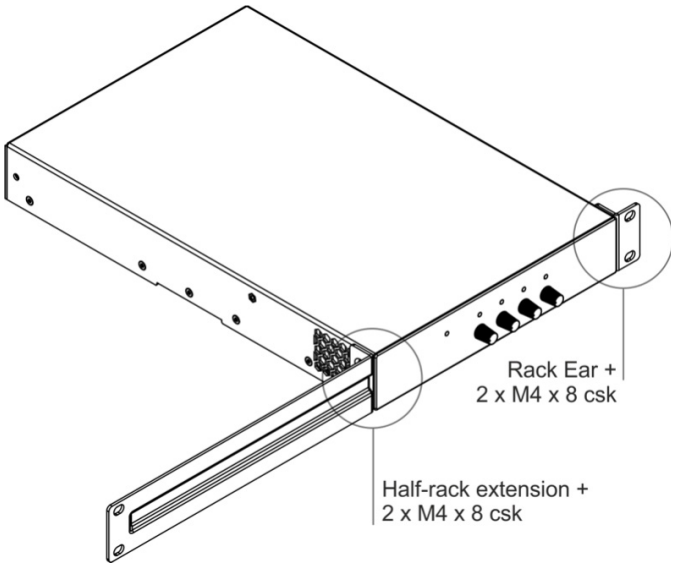

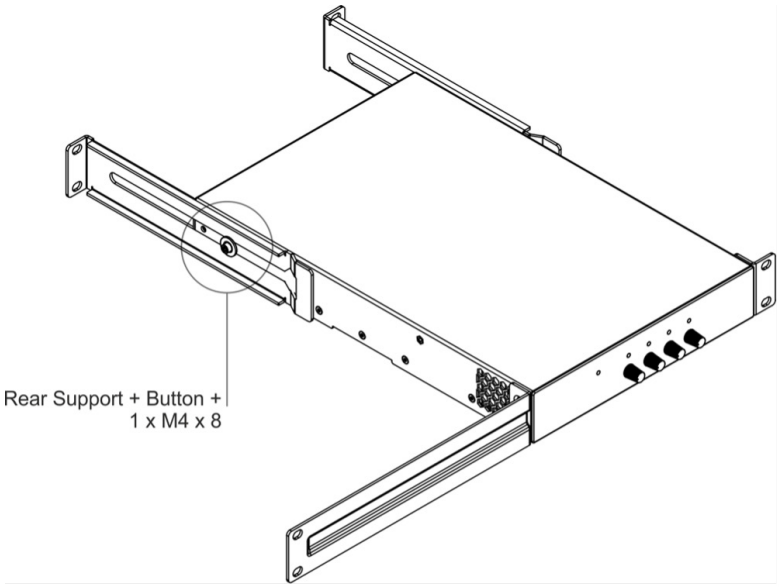

Installation & Rack Mounting

SmartAmp 20 is shipped without rack mount hardware attached but can be configured for rack installation using one standard rack 'ear' and one half-rack extension piece as illustrated. The installation and equipment rack should be configured to provide appropriate ventilation airflow space around the sides and rear of the amplifier. Ventilation airflow space of at least 25 mm (1 in) should be maintained along at least one side of the amplifier at all times. Ventilation apertures are also located on the rear panel of the amplifier and must not be obstructed. It is important to retain at least 80 mm (3.1 in) free space for airflow behind the amplifier rear panel.

In addition to rack mount ears, optional rack mount rear support hardware is available and can be attached to the amplifier. Rear support hardware may be appropriate if the amplifier is to be used in a mobile rack or potentially be subject to significant movement. Multiple SmartAmp 20 can also be mechanically connected using accessory connecting plates.

© 2026. Optimal Audio Group Ltd. (v2.0)

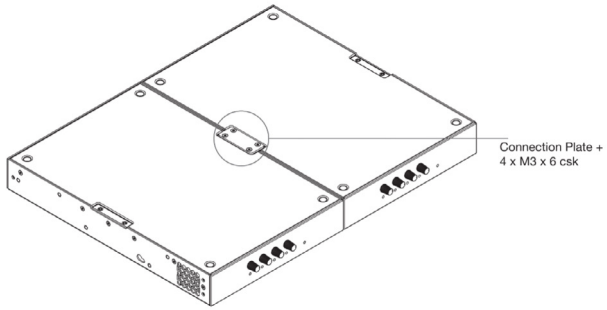

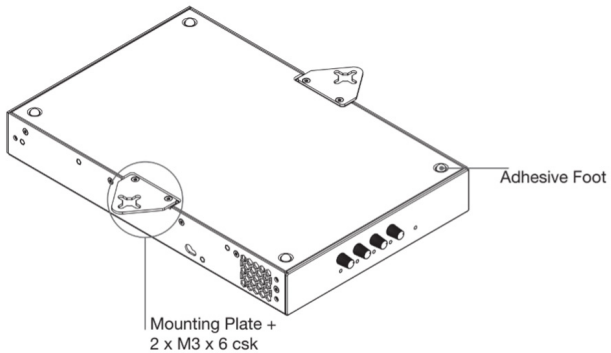

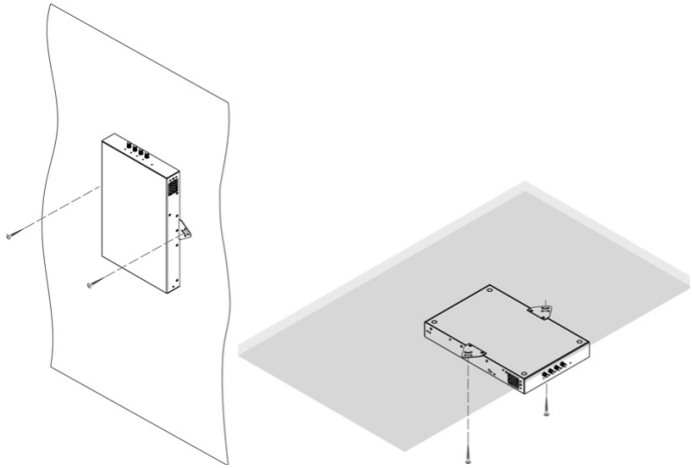

Installation & Rack Mounting

Two SmartAmp 20 amplifiers mechanically connected through the connection plate.

SmartAmp 10 is also shipped without rack mount hardware attached but can be configured for rack installation in the same way as SmartAmp 20.

Free-standing

If not to be installed in an equipment rack, SmartAmp can be placed free-standing on a flat surface. Adhesive rubber feet are supplied for this purpose.

SmartAmp 10 and SmartAmp 20 can also be attached to the underside of desks or wall mounted using connecting plate hardware. The adhesive rubber feet should also be used in these circumstances. Wall and desk mounting is illustrated above.

It is important in any free-standing installation that airflow through the amplifier's side panel mounted fans and rear panel ventilation apertures is not compromised by adjacent items. At least 80mm of free space behind the amplifier and 25mm along at least one side should be retained at all times.

© 2026. Optimal Audio Group Ltd. (v2.0)

Maintenance

Your Optimal Audio SmartAmp should require minimal maintenance and prove to be a reliable workhorse in your sound system

From time to time it may be necessary to clean the fan filters. SmartAmps are forced air cooled, and if located in certain environments the filters can become blocked, causing the amplifier to run at high temperatures, with the potential for shut down.

If in doubt, contact your distributor, who will help you with whatever you need to keep your Optimal Audio system running at its best.

© 2026. Optimal Audio Group Ltd. (v2.0)

SmartAmp

Amplifiers with DSP

TECHNICAL SPECIFICATIONS	SmartAmp 10	SmartAmp 20	SmartAmp 30
TYPE	CLASS D power amplifier with DSP	CLASS D power amplifier with DSP	CLASS D power amplifier with DSP
POWER OUTPUT (4Ω-16Ω)	2 x 125W	4 x 125W	4 x 250W
70V – 100V OUTPUT	2 x 125W	4 x 125W	4 x 250W
DIGITAL SIGNAL PROCESSING	EQ & limiter presets for Optimal Audio loudspeakers	EQ & limiter presets for Optimal Audio loudspeakers	EQ & limiter presets for Optimal Audio loudspeakers
COOLING	Forced air cooling with fan	Forced air cooling with fan	Forced air cooling with fan
ANALOGUE IN/LINK	2 balanced line inputs on Euroblock connectors	4 balanced line inputs on Euroblock connectors	4 balanced line inputs on Euroblock connectors
ANALOGUE INPUT IMPEDANCE	10kΩ unbalanced, 20kΩ balanced	10kΩ unbalanced, 20kΩ balanced	10kΩ unbalanced, 20kΩ balanced
MAXIMUM ANALOGUE INPUT LEVEL	+24dBu	+24dBu	+24dBu
AMPLIFIER OUTPUTS	Euroblock	Euroblock	Euroblock
SIGNAL TO NOISE RATIO	> 100dB (A-weighted, 20Hz - 20kHz, 8Ω load)	> 100dB (A-weighted, 20Hz - 20kHz, 8Ω load)	> 100dB (A-weighted, 20Hz - 20kHz, 8Ω load)
FREQUENCY RESPONSE	20Hz - 20kHz, +0/-0.25dB (8Ω load, 3 dB below rated power)	20Hz - 20kHz (+0/-0.25dB (8Ω load, 3dB below rated power)	20Hz - 20kHz, +0/-0.25dB (8Ω load, 3dB below rated power)
TOTAL HARMONIC DISTORTION	< 0.05 % (20Hz - 20kHz, 8Ω load, 3dB below rated power)	< 0.05 % (20Hz - 20kHz, 8Ω load, 3dB below rated power)	< 0.05 % (20Hz - 20kHz, 8Ω load, 3dB below rated power)
SLEW RATE	8.796V/µS at 70V peak, low impedence, 17.77V/µS at 100V peak, high impedence	8.796V/µS at 70V peak, low impedence, 17.77V/µS at 100V peak, high impedence	8.796V/µS at 70V peak, low impedence, 17.77V/µS at 100V peak, high impedence
DAMPING FACTOR	370 with 8Ω load	370 with 8Ω load	370 with 8Ω load
CONTROL AND MONITORING	GPIO	GPIO	GPIO
DSP SAMPLE RATE	48kHz	48kHz	48kHz
MAINS POWER INPUT	Universal mains, 100-240V, 50-60Hz	Universal mains, 100-240V, 50-60Hz	Universal mains, 100-240V, 50-60Hz
MAINS CONNECTOR	IEC	IEC	IEC
POWER CONSUMPTION	75W	150W	300W
HEAT GENERATED	270kJ per hour	540kJ per hour	1080kJ per hour
DIMENSIONS	(W) 220mm x (H) 43.9mm x (D) 277mm (W) 8.67" x (H) 1.73" x (D) 10.91"	(W) 220mm x (H) 44mm x (D) 353mm (W) 8.67" x (H) 1.73" x (D) 13.90"	(W) 440mm x (H) 44mm x (D) 308mm (W) 17.32" x (H) 1.73" x (D) 12.13"
WEIGHT	1.9kg (4.2lb)	2.4kg (5.3lb)	3.6kg (7.9lb)
ACCESSORIES (available separately)	Rack ears and connection plate, rear rack support kit, wall/desktop mount kit	Rack ears and connection plate, rear rack support kit, wall/desktop mount kit	Rear rack support kit
ACCESSORIES (included)	n/a	n/a	2 x rack ears

© 2026. Optimal Audio Group Ltd. (v2.0)

Appendix A

Single Half Rack Unit

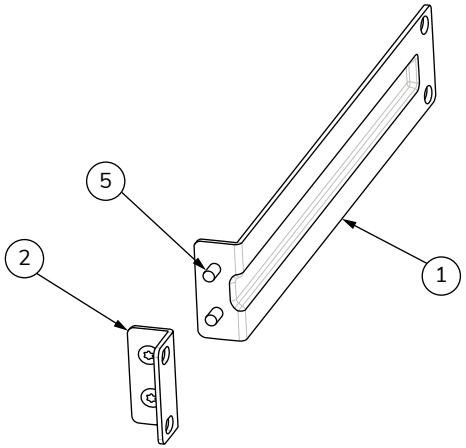

Two Joined Half Rack Units

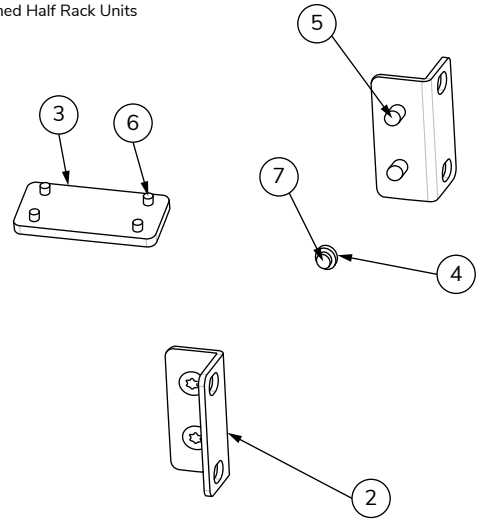

ITEM NO.	DESCRIPTION	Qty.
1	Long Rack ear 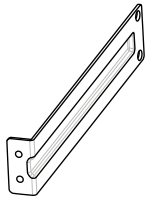	1
2	Rack Ear 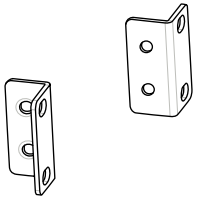	2
3	Coupling Plate 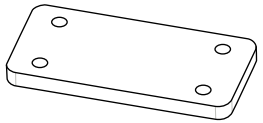	1
4	SmartAmp Support Bush	1
5	Torx Screw Countersink M4 x 8	4
6	Torx Screw Countersink M3 x 6 Black	4
7	Torx Screw Button M3 x 6 Black	1

Optimal Audio

OPTIMAL AUDIO GROUP LTD
CENTURY POINT, HALIFAX ROAD
CRESSEX BUSINESS PARK,
HIGH WYCOMBE,
BUCKINGHAMSHIRE
HP12 3SL, ENGLAND
TEL: +44 (0)1494 535312
WEB: www.optimal-audio.co.uk

DATE:

15/11/2021

DRAWN BY:

CC

ISSUE:

001

All information is Copyright © by Optimal Audio Group Ltd.

SmartAmp Rack Kit A

© 2026. Optimal Audio Group Ltd. (v2.0)

Appendix B

Rack Kit B Front

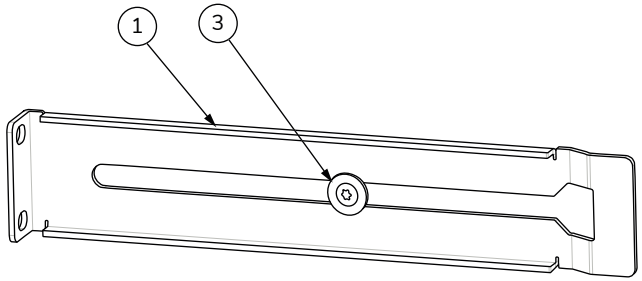

Rack Kit B Back

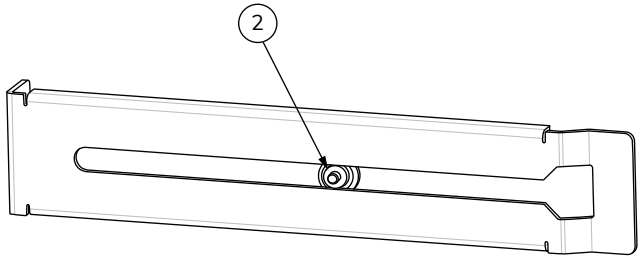

ITEM NO.	DESCRIPTION	Qty.
1	Support Bracket 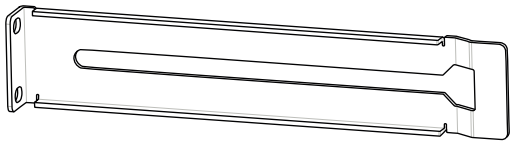	2
2	Support Bush 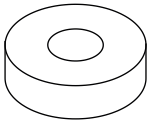	2
3	Torx Screw Flathead M4 x 8 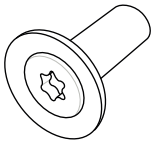	2

Optimal Audio

OPTIMAL AUDIO GROUP LTD
CENTURY POINT, HALIFAX ROAD
CRESSEX BUSINESS PARK,
HIGH WYCOMBE,
BUCKINGHAMSHIRE
HP12 3SL, ENGLAND
TEL: +44 (0)1494 535312
WEB: www.optimal-audio.co.uk

DATE:

18/11/2021

DRAWN BY:

CC

ISSUE:

001

All information is Copyright ©
by Optimal Audio Group Ltd.

SmartAmp Rack Kit B

© 2026. Optimal Audio Group Ltd. (v2.0)

Appendix C

SmartAmp Wall Mount

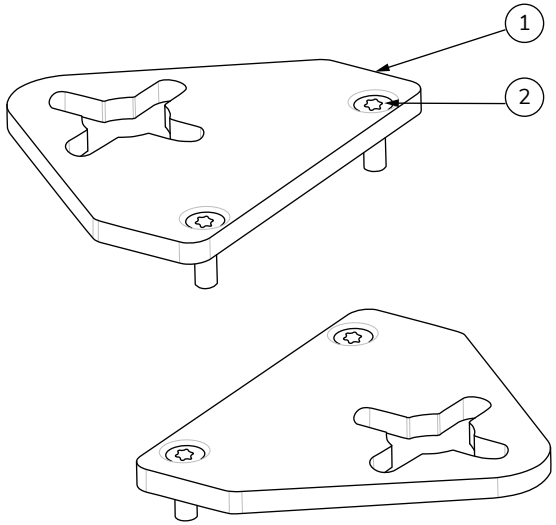

ITEM NO.	DESCRIPTION	Qty.
1	Wall Mount Bracket 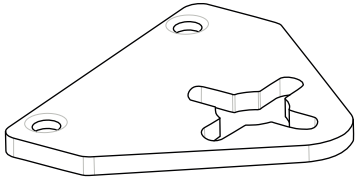	2
2	Torx Screw Countersink M3 x 6 Black 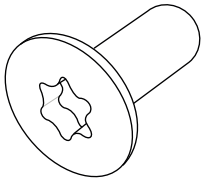	4

Optimal Audio

OPTIMAL AUDIO GROUP LTD
CENTURY POINT, HALIFAX ROAD
CRESSEX BUSINESS PARK,
HIGH WYCOMBE,
BUCKINGHAMSHIRE
HP12 3SL, ENGLAND
TEL: +44 (0)1494 535312
WEB: www.optimal-audio.co.uk

DATE:

24/11/2021

DRAWN BY:

CC

ISSUE:

001

All information is Copyright ©
by Optimal Audio Group Ltd.

SmartAmp Wall Mount

Part Number: WALLMNT-B

© 2026. Optimal Audio Group Ltd. (v2.0)

WARNING!

DO NOT EXPOSE THIS EQUIPMENT TO RAIN OR MOISTURE

This symbol is intended to alert the user to the presence of important operating and maintenance (servicing) instructions in the literature accompanying the appliance.

CAUTION

RISK OF ELECTRIC SHOCK DO NOT OPEN

This symbol is intended to alert the user to the presence of uninsulated “dangerous voltage” within the product’s enclosure that may be of **sufficient magnitude to constitute a risk** of electric shock to persons.

THIS EQUIPMENT MUST BE EARTHED

Important Safety Instructions

1. Read these instructions.
2. Keep these instructions.
3. Heed all warnings.
4. Follow all instructions.
5. Do not use this apparatus near water.
6. Clean only with a dry cloth.
7. Do not block any ventilation opening. Install in accordance with the manufacturer’s instructions.
8. Do not install near any heat sources such as radiators, heat registers, stoves, or other apparatus (including amplifiers) that produce heat.
9. To reduce the risk of electrical shock, the power cord shall be connected to a mains socket outlet with a protective earthing connection.
10. Do not defeat the safety purpose of the polarized or grounding type plug. A polarized plug has two blades with one wider than the other. A grounding type plug has two blades and a third grounding prong. The wide blade or the third prong are provided for your safety. If the provided plug does not fit into your outlet, consult an electrician for replacement of the obsolete outlet.
11. Protect the power cord from being walked on or pinched particularly at plugs, convenience receptacles, and the point where they exit from the apparatus.
12. Do not unplug the unit by pulling on the cord, use the plug.
13. Unplug this apparatus during lightning storms or when unused for long periods of time.
14. Refer all servicing to qualified service personnel. Servicing is required when the apparatus has been damaged in any way, such as power supply cord or plug is damaged, liquid has been spilled or objects have fallen into the apparatus, the apparatus has been exposed to rain or moisture, does not operate normally, or has been dropped.
15. The appliance coupler, or the AC Mains plug, is the AC mains disconnect device and shall remain readily accessible after installation.
16. The apparatus shall not be exposed to dripping or splashing and no objects filled with liquids, such as vases, shall be placed on the apparatus.
17. Do not remove any covers, loosen any fixings or allow items to enter any aperture.

FCC Compliance

This device complies with part 15 of the FCC Rules. Operation is subject to the following two conditions:

1. This device may not cause harmful interference.
2. This device must accept any interference received, including interference that may cause undesired operation.

Note: This equipment has been tested and found to comply with the limits for a Class B digital device, pursuant to part 15 of the FCC Rules. These limits are designed to provide reasonable protection against harmful interference in a residential installation. This equipment generates uses and can radiate radio frequency energy and, if not installed and used in accordance with the instructions, may cause harmful interference to radio communications.

© 2026. Optimal Audio Group Ltd. (v2.0)

Relax, It’s Optimal Audio.

optimal-audio.co.uk

Optimal Audio Group Ltd.
Century Point, Halifax Road,
Cressex Business Park,
High Wycombe,
Buckinghamshire,
HP12 3SL